REPAIR PARTS MANUAL

MODEL NO. RE12538E

Lawn Tractor

Rally

176888 11.15.00 RH
PRINTED IN U.S.A.

HOW TO USE THIS MANUAL

This manual is designed to provide the customer with a means to identify the parts on his/her tractor when ordering repair parts. The illustrations may or may not represent the actual assemblies; therefore, it is not recommended to use this manual as a guide to assemble or disassemble the tractor. Some hardware and parts are drawn larger in order to more readily identify them.

Each tractor has its own model number.

The model number for your tractor can be found on the fender under the seat.

When ordering parts, always give the following information:

- Product - “Lawn Tractor”
- Model Number - “RE12538E”
- Part Number
- Part Description

TABLE OF CONTENTS

SCHEMATIC 3

ELECTRICAL 4-5

CHASSIS AND ENCLOSURES 6-7

DRIVE 8-9

STEERING 10-11

ENGINE 12

SEAT 13

DECALS 14

MOWER LIFT 15

MOWER DECK 16-17

TRACTOR - - MODEL NUMBER RE12538E

SCHEMATIC

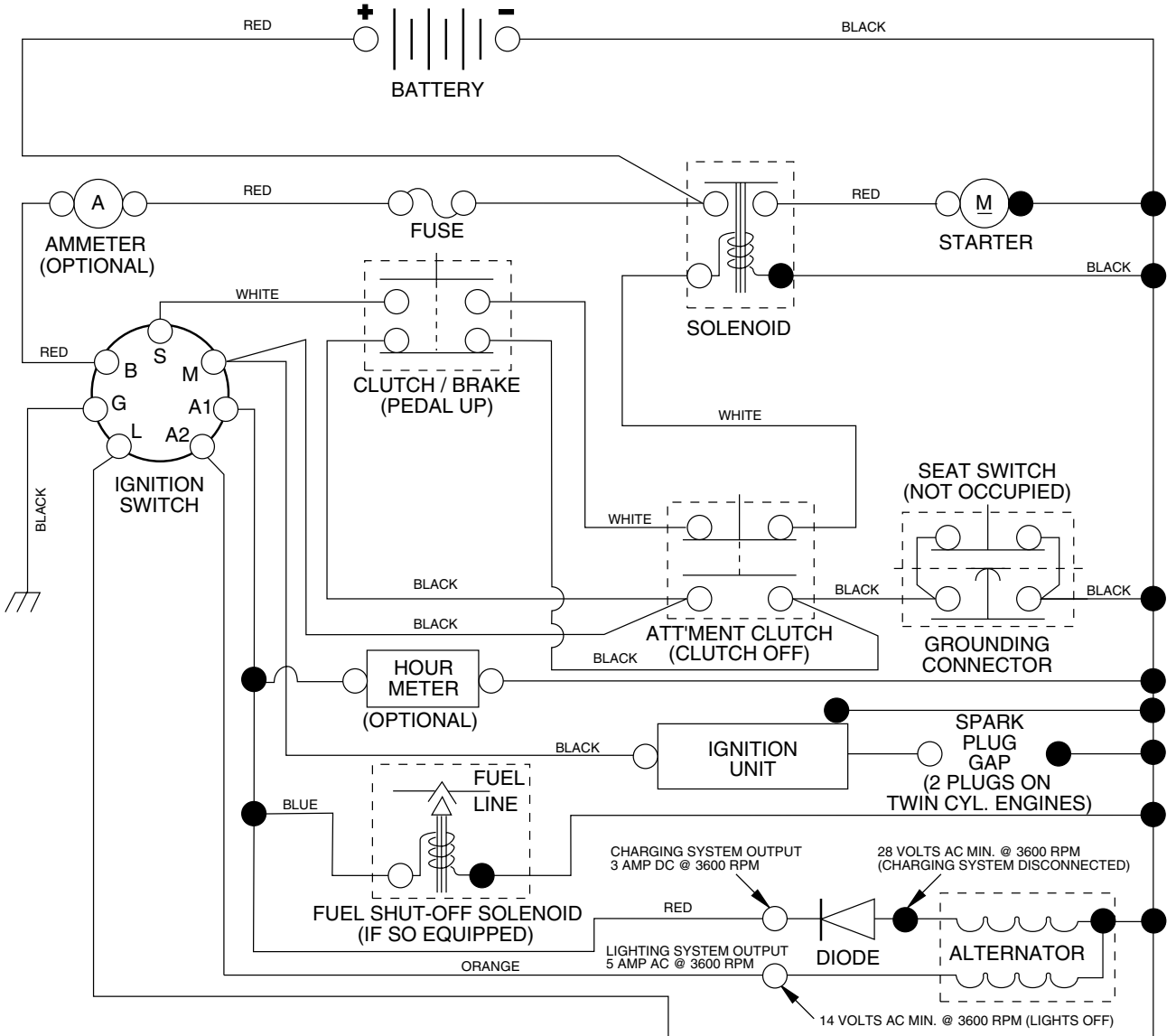

NOTE

YOUR TRACTOR IS EQUIPPED WITH A SPECIAL ALTERNATOR SYSTEM. THE LIGHTS ARE NOT CONNECTED TO THE BATTERY, BUT HAVE THEIR OWN ELECTRICAL SOURCE. BECAUSE OF THIS, THE BRIGHTNESS OF THE LIGHTS WILL CHANGE WITH ENGINE SPEED. AT IDLE THE LIGHTS WILL DIM. AS THE ENGINE IS SPEEDED UP, THE LIGHTS WILL BECOME THEIR BRIGHTEST.

NON-REMOVABLE CONNECTIONS

REMOVABLE CONNECTIONS

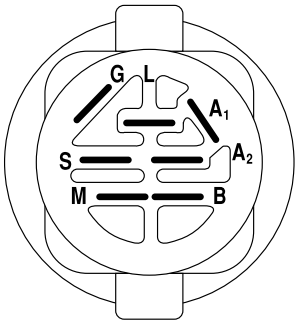

IGNITION SWITCH

POSITION	CIRCUIT	"MAKE"
OFF	M+G+A1	NONE
RUN/LIGHT	B+A1	A2+L
RUN	B+A1	NONE
START	B + S + A1	NONE

WIRING INSULATED CLIPS

NOTE: IF WIRING INSULATED CLIPS WERE REMOVED FOR SERVICING OF UNIT, THEY SHOULD BE REPLACED TO PROPERLY SECURE YOUR WIRING.

REPAIR PARTS

TRACTOR - - MODEL NUMBER RE12538E

ELECTRICAL

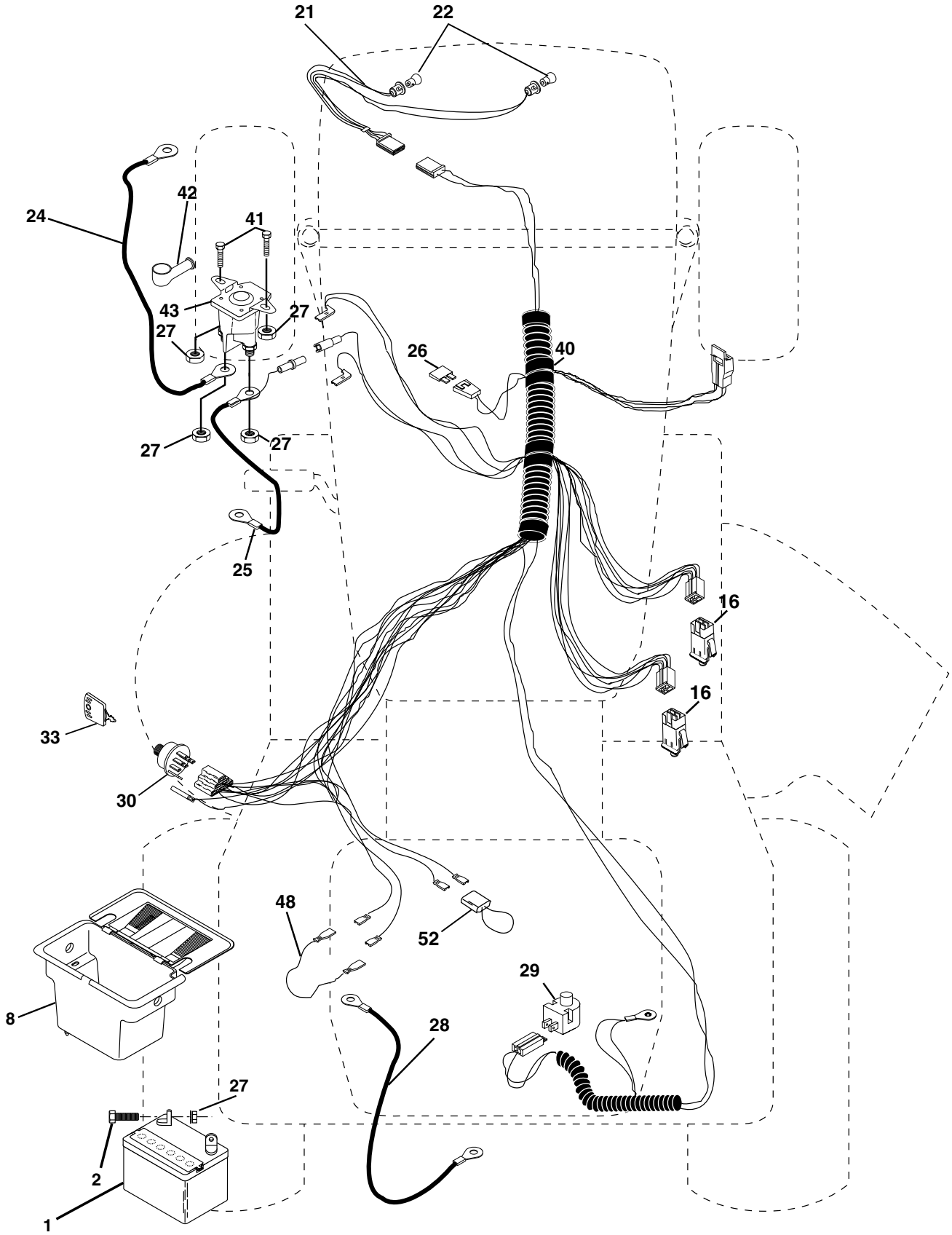

REPAIR PARTS

TRACTOR - - MODEL NUMBER RE12538E

ELECTRICAL

KEY NO.	PART NO.	DESCRIPTION
1	144925	Battery 12 Volt 25 Amp
2	74760412	Bolt Hex Hd 1/4-20unc X 3/4
8	156417	Case Battery
16	153664	Switch Interlock Push-In
21	166181	Harness Asm Light W/4152J
22	4152J	Bulb Light #1156
24	4799J	Cable Starter 6 Ga 11"red
25	146147	Cable Battery 6 Ga red W/ 16" Wire
26	**175158**	Fuse 20 AMP
27	73510400	Nut, Keps Hex 1/4-20 UNC
28	4207J	Cable Ground 6 Ga 12" black
29	121305X	Switch Plunger Nc Gray
30	**175566**	Switch, Ignition
33	140401	Key Ign
40	170217	Harness Ign
41	71110408	Bolt Blk Fin Hex 1/4-20 x 1/2
42	131563	Cover Terminal Red
43	**175141**	Solenoid
48	140844	Adapter Ammeter Rectangular
52	141940	Protection Wire Loop

NOTE: All component dimensions give in U.S. inches
1 inch = 25.4 mm.

REPAIR PARTS

TRACTOR - - MODEL NUMBER RE12538E

CHASSIS AND ENCLOSURES

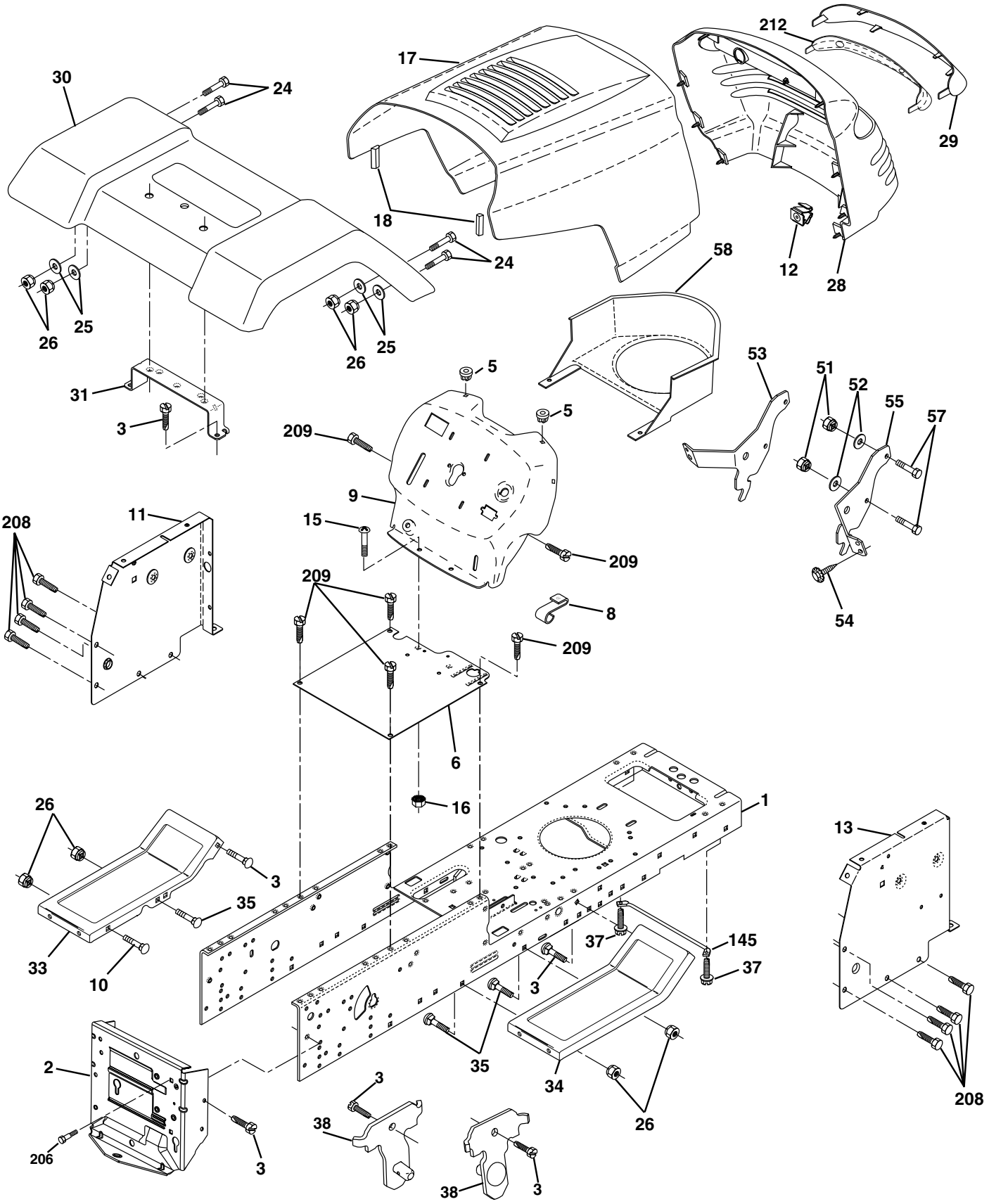

REPAIR PARTS

TRACTOR - - MODEL NUMBER RE12538E

CHASSIS AND ENCLOSURES

KEY NO.	PART NO.	DESCRIPTION
1	169831	Chassis
2	169061	Drawbar
3	17060612	Screw 3/8-16 x 3/4
5	155272	Bumper Hood/Dash
6	155923	Saddle
8	155138	Clip, Retainer Slide-On
9	168347X011	Dash
10	72140608	Bolt, Carriage 3/8-16 x 1
11	155927	Dashboard, panel LH
12	145660	Clip Tinnerman Grille P/L
13	172107X010	Dashboard, panel RH
15	74180512	Machine screw 5/16-18 unc x 3/4
16	73510500	Nut, Keps 5/16-18 Unc
17	159639X505	Hood Pnt Stl P/L w/Trim 505
18	126938X	Bumper Hood
24	74780616	Bolt, Hex Head, Fin. 3/8-16 x 1 Grade 5
25	19131312	Washer 13/32 x 13/16 x12 Gauge
26	73800600	Nut Lock Hex w/Ins. 3/8-16 Unc
28	140434	Grille/Lens Asm.
29	140273X599	Lens
30	169467X505	Fender
31	136619	Fender Bracket
33	105476X505	Footrest, LH
34	105475X505	Footrest, RH
35	72110606	Bolt 3/8-16 X 3/4
37	17490508	Screw Thdrol 5/16-18 x 1/2
38	169834	Bracket Asm. Pivot Mower Rear
51	73800400	Nut Lock, w/Insert 14/20 UNC
52	19091416	Washer 9/32 x 7/8 x 16 Ga.
53	144697	Bracket Grille
54	161464	Screw Hex WsHd 8-18 x 7/8
55	144696	Bracket Grille RH
57	74780412	Bolt FinHex 1/4-20 UNC x .75
58	150127	Duct Air Engine P/L LT
145	156524	Rod Pivot Chassis/Hood
206	170165	Bolt Shoulder 5/16-18 TT
208	17670608	Screw Thdrol 3/8-16 x 1/2
209	17000612	Screw Hexwsh Thdr 3/8-16 x 3/4
212	156229	Insert Lens Reflect
- -	5479J	Button Plug

NOTE: All component dimensions given in U.S. inches
1 inch = 25.4 mm

REPAIR PARTS

TRACTOR - - MODEL NUMBER RE12538E

DRIVE

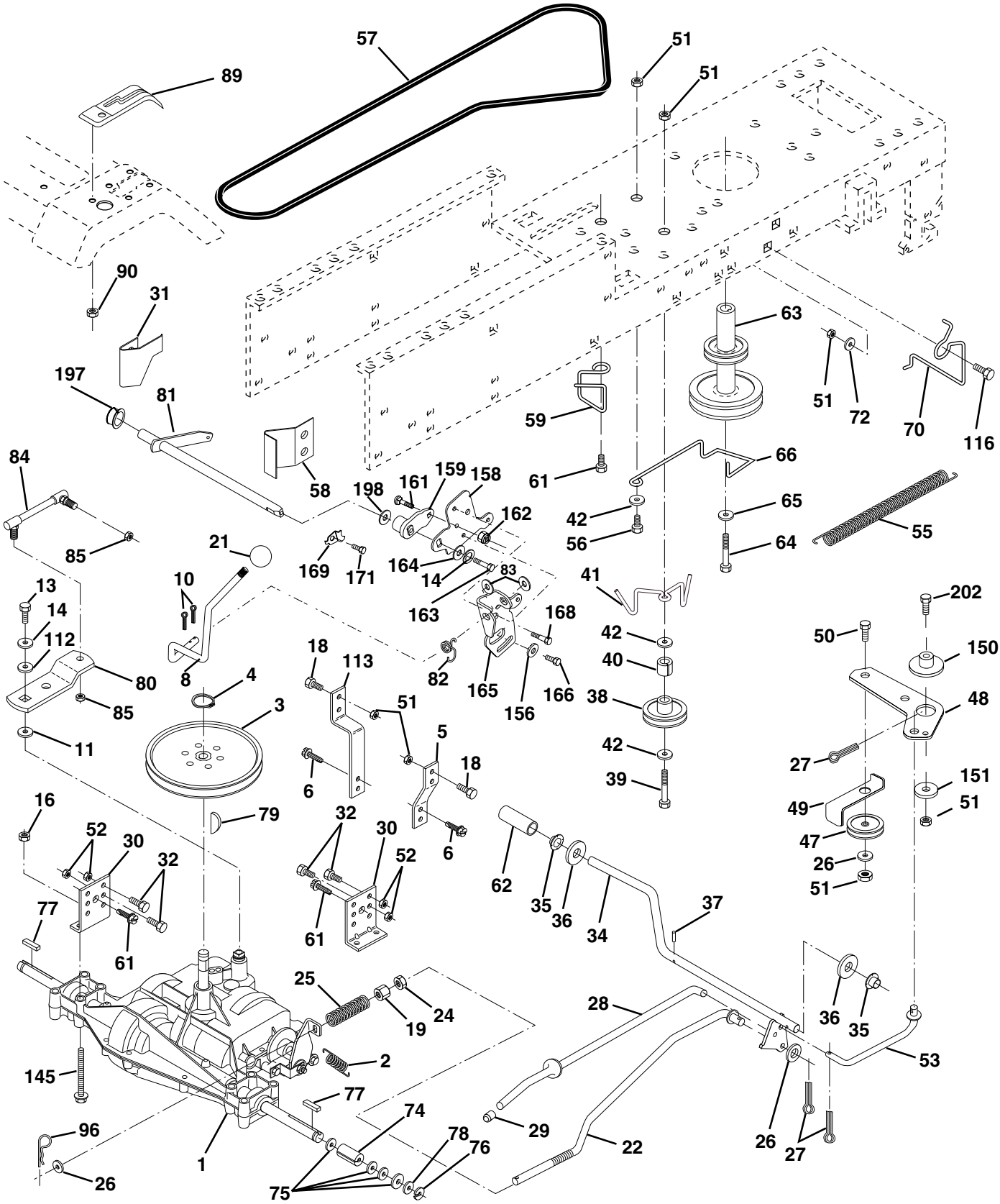

REPAIR PARTS

TRACTOR - - MODEL NUMBER RE12538E

DRIVE

KEY NO.	PART NO.	DESCRIPTION
1	- - - - - - -	Transaxle Peerless 205-544C (Order parts from transaxle manufacturer)
2	146682	Spring, Brake Return
3	123666X	Pulley, Transaxle
4	12000028	Ring, Retainer
5	121520X	Strap, Torque
6	17060512	Screw, 5/16-18 x 3/4
8	165619	Rod Shift Fender Adjust LT
10	76020416	Pin, Cotter 1/8 x 1
11	105701X	Washer, Shift Plate
13	74550412	Bolt 1/4-28 UNF Gr. 8 w/Patch
14	10040400	Washer Lock
16	73800500	Nut Lock Hex w/Ins 5/16-18 Unc
18	74780616	Bolt, Fin Hex 3/8-16 Unc x 1 Gr. 5
19	73800600	Locknut 3/8-16
21	106933X	Knob
22	130804	Rod, Brake
24	73350600	Nut, Hex Jam 3/8-16
25	106888X	Spring, Rod, Brake
26	19131316	Washer 13/32 x 13/16 x 16 Gauge
27	76020412	Pin, Cotter 1/8 x 3/4
28	145204	Rod, Brake, Park
29	71673	Cap, Plunger
30	**174973**	Bracket, Transaxle, L.H.
31	127275X	Keeper Belt Lh Lt
32	74760512	Bolt Hex Hd 5/16-18 UNC x 3/4
34	155071	Shaft, Foot Pedal
35	120183X	Bearing Nylon
36	19211616	Washer 21/32 x 1 x 16 Gauge
37	1572H	Pin,Roll 3/16 x 1
38	131494	Idler, Flat
39	74760644	Bolt Fin Hex 3/8-16 Unc x 2-3/4
40	4470J	Spacer
41	165838	Keeper, Belt
42	19131312	Washer 13/32 x 13/16 x 12 Gauge
47	127783	Pulley, Idler
48	154407	Bellcrank Clutch Grnf Drv Stl
49	123205X	Retainer, Belt
50	74760624	Bolt, Hex 3/8-16 x 1-1/2
51	73680600	Nut, Crownlock 3/8-16
52	73680500	Nut, Crownlock 5/16-18
53	105710X	Link, Clutch
55	105709X	Spring, Return, Clutch
56	74760620	Bolt, Fin, Hex 3/8-16unc x 1-1/2
57	130801	V-Belt, Drive
58	127274X	Keeper Belt Rh Lt
59	169691	Keeper Belt Center Span
61	17060612	Screw, 3/8-16 x 3/4
62	8883R	Cover, Foot Pedal
63	140186	Pulley, Engine
64	71170764	Bolt, Hex 7/16-20 x 4 Gr. 5
65	10040700	Washer, Lock Hvy Hlcl Spr 7/16
66	154778	Keeper, Belt Engine F-Proof
70	134683	Guide Belt Mower Drive RH
72	19132012	Washer 13/32 x 1-1/4 x 12 Ga.
74	137057	Spacer, Axle
75	121749X	Washer 25/32 x 1-1/4 x 16 Ga.
76	12000001	E-Ring
77	123583X	Key Square
78	121748X	Washer 25/32 x 1-5/8 x 16 Ga.
79	2228M	Key Woodruff #9 3/16 x 3/4
80	131486	Shift Arm
81	165594	Shaft Asm Cross Tapered DA/PR 18
82	123782X	Spring, Torsion
83	19171216	Washer 17/32 x 3/4 x 16 Gauge
84	166228	Link, Transaxle PMST/18" Zinc
85	150360	Nut 1/4-28
89	169370X428	Console Shift
90	124346X	Nut, Washer Head, Self-Thread 1/4
96	4497H	Retainer Spring 1" Ziinc/Cad
112	19091210	Washer 9/32 x 3/4 x 10 Ga.
113	127285X	Strap Torque L.H. Lt
116	72110610	Bolt, RdHd Sq Neck 3/8-16 x 1.25
145	74490540	Bolt, Hex Flghd 5/16-18 Gr. 5
150	165850	Bushing, Bellcrank Grd Drive
151	19133210	Washer 13/32 x 2 x 10 Ga.
156	166002	Washer Srrted 5/16ID x 1 x .125
158	165589	Bracket, Shift Mount
159	165494	Hub, Tapered Flange Shift LT
161	72140406	Bolt Rdhd Sqnk 1/4-20 x 3/4 Gr 5
162	73680400	Nut, Crownlock 1/4-20 UNC
163	74780416	Bolt, Hex Fin 1/4-20 UNC x 1 Gr 5
164	19091010	Washer 5/8 x .281 x 10 Ga
165	165623	Bracket Pivot Lever
166	166880	Screw 5/16-18 x 5/8
168	165492	Bolt Shoulder 5/16-18 x .561
169	165581	Plate, Fastening LT
171	17490608	Screw Thdrol 3/8-16 x 1/2 TY-TT
197	169613	Nyliner Snap-In 5/8" ID
198	169593	Washer Nyl 7/8 Id x .105"
202	72110612	Bolt Carr Sh 3/8-16 x 1-1/2 Gr 5

NOTE: All component dimensions given in U.S. inches
1 inch = 25.4 mm

REPAIR PARTS

TRACTOR - - MODEL NUMBER RE12538E

STEERING

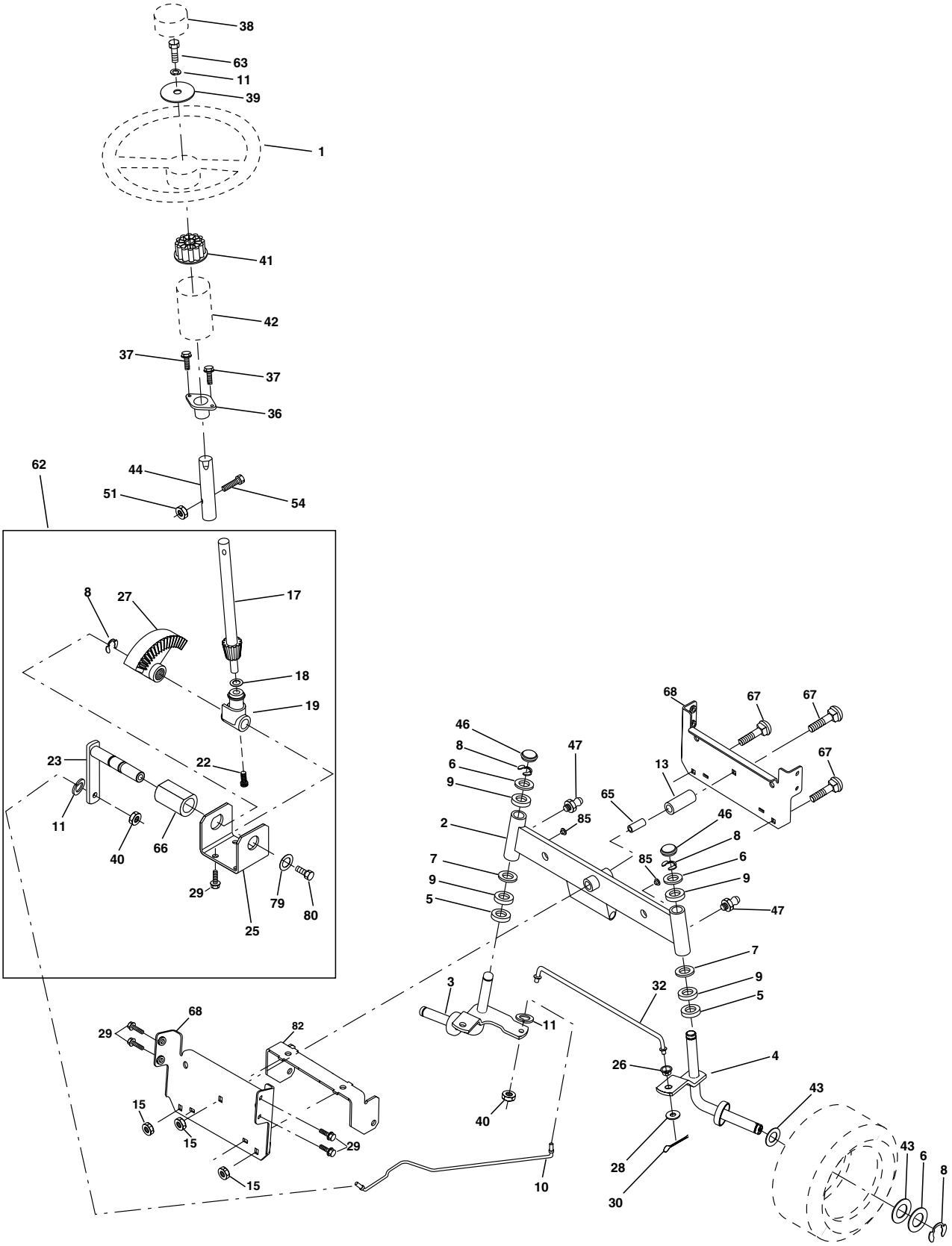

REPAIR PARTS

TRACTOR - - MODEL NUMBER RE12538E

STEERING

KEY NO.	PART NO.	DESCRIPTION
1	**133741X428**	Wheel, Steering
2	154427	Asm. Axle, Rear
3	169840	Asm., Spindle, Lh
4	169839	Asm., Spindle, Rh
5	6266H	Bearing, Thrust, Hardened
6	121748X	Washer 25/32 x 1-5/8 x 16 Ga.
7	19272016	Washer 27/32 x 1-1/4 x 16 Ga.
8	12000029	Ring, Clip
9	3366R	Bearing
10	169832	Link, Drag
11	10040600	Washer, Lock
13	136518	Spacer Brg Axle Front
15	145212	Nut Hex Flange Lock
17	156546	Asm. Shaft, Steering
18	57079	Washer, Thrust .515 x .750 x .033
19	160395	Support, Shaft
22	165857	Screw, Hex Wshhd Torx
23	165851	Shaft, Asm Pitman
25	154406	Bracket, Steering
26	126847X	Bushing, Link, Drag
27	136874	Gear, Sector
28	19131416	Washer 13/32 x 7/8 x 16 Ga.
29	17060612	Screw, 3/8-16 x 3/4
30	76020412	Pin, Cotter
32	130465	Rod, Tie
36	155099	Bushing, Steering
37	152927	Screw
38	**133742X428**	Insert, Steering
39	19133812	Washer 13/32 x 2-3/8 x 12 Ga.
40	7810H	Nut
41	100711L	Adapter, Steering
42	145054X428	Boot, Shaft Steering Blk
43	121749X	Washer 25/32 x 1-1/4 x 16 Ga.
44	153720	Extension Steering Non-Adjust
46	121232X	Cap, Spindle
47	6855M	Fitting, Grease
51	73800500	Nut Lock Hex w/Ins. 5/16-18 Unc
54	74780520	Bolt Fin Hex 5/16-18 Unc x 1-1/4
62	167902	Kit, Steering Asm, Service
63	74780616	Bolt Fin Hex 3/8-16 Unc x 1 Gr. 5
65	160367	Spacer Brace Axle
66	154404	Bearing Arm Pittman
67	72140618	Bolt Rdhd Sq 3/8-16 Unc x 2-1/4
68	169827	Axle, Brace
79	19132012	Washer 13/32 x 1-1/4 x 12 Ga.
80	74950612	Bolt, Hex Nylon 3/8-16 x 3/4
82	169835	Bracket Susp Chassis Front
85	133835	Fastner Christmas Tree

NOTE: All component dimensions given in U.S. inches
1 inch = 25.4 mm

REPAIR PARTS

TRACTOR - - MODEL NUMBER RE12538E

ENGINE

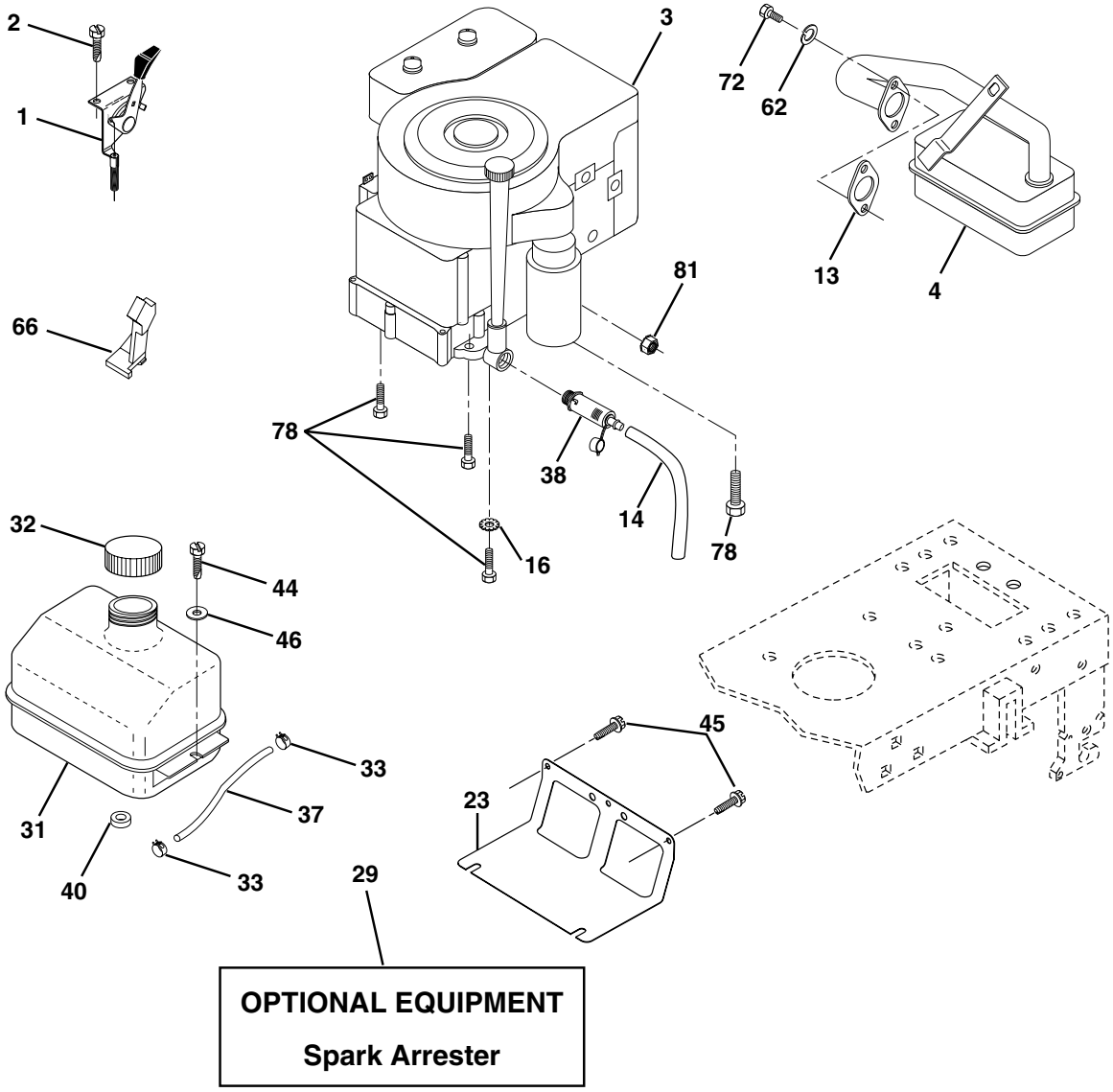

KEY NO.	PART NO.	DESCRIPTION
1	**170865**	Control Th/ch Flag EEC 20.22
2	17720410	Screw Hex Thd Cut 1/4-20x5/8 T
3	- - - - - -	Engine Briggs Model 289707 (Order parts from engine manufacturer)
4	137348	Muffler LT
13	165291	Gasket Eng 1 313 Id Tin Plated
14	**148456**	Drain Oil Tube Easy
16	11050600	Washer Lock Ext Tooth 3/8
23	169837	Shield Brn/Dbr Guard
29	137180	Kit Spark Arrestor (Flat Scrn)
31	109202X	Tank Fuel Front 2 00
32	140527	Cap Asm Fuel
33	123487X	Clamp Hose Blk
37	137040	Line Fuel

KEY NO.	PART NO.	DESCRIPTION
38	**148315**	Plug Drain Oil Easy
40	124028X	Bushing Snap Nyl Blk Fuel Line
44	17670412	Screw Hexwsh Thdrol 1/4-20x3/4
45	17000612	Screw Hex Wsh Thdr 3/8-16 x 3/4
46	19091416	Washer 9/32 X 7/8 X 16 Ga
62	10040500	Washer 5/16
66	127951	Stop Throttle 3000 RPM
72	71070512	Screw Hex Hd Cap 5/16-18 x 3/4
78	17060620	Screw 3/8-16x1-1/4
81	73510400	Nut Keps Hex 1/4-20 Unc

NOTE: All component dimensions given in U.S. inches. 1 inch = 25.4 mm.

REPAIR PARTS

TRACTOR - - MODEL NUMBER RE12538E

SEAT

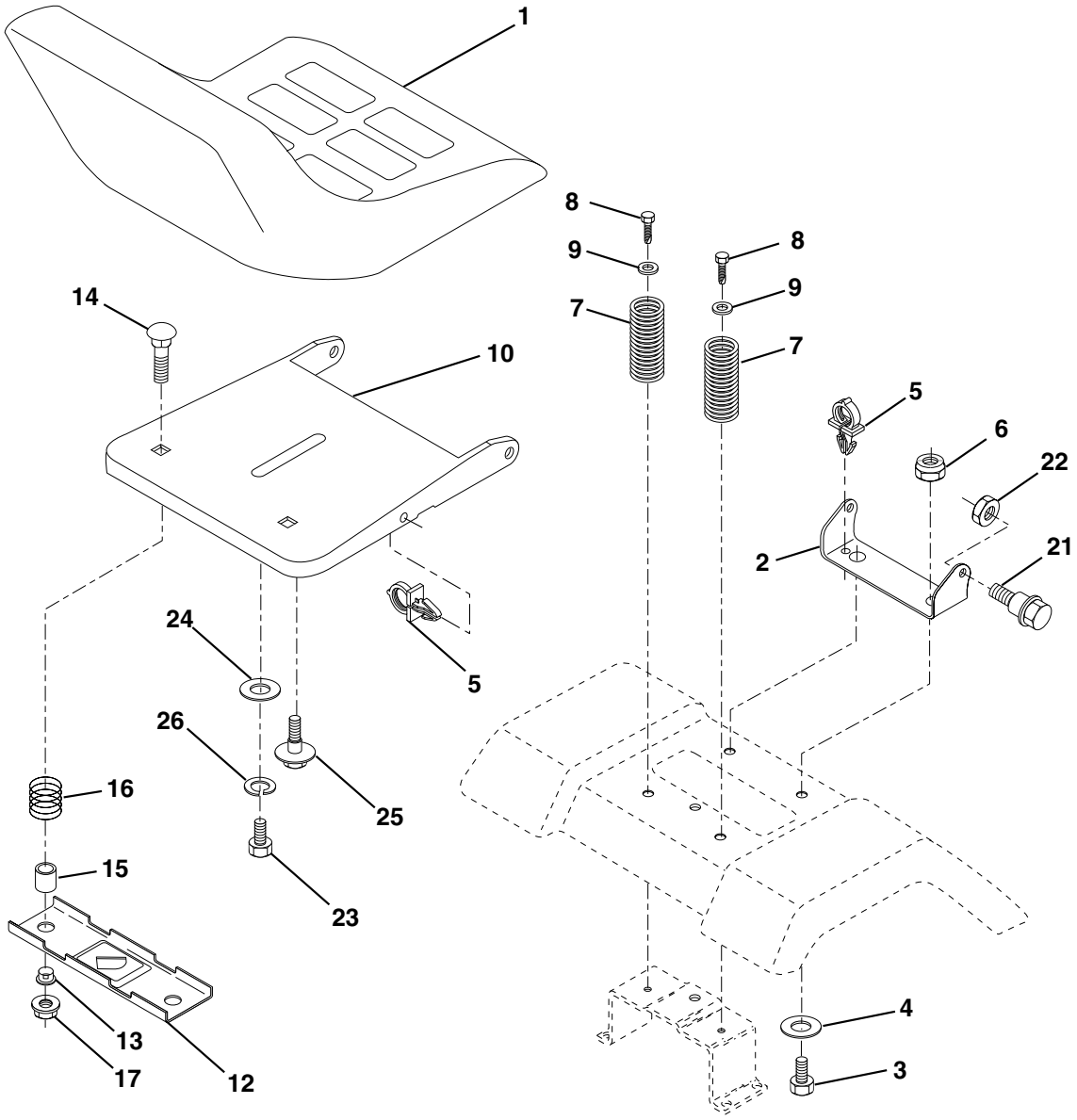

KEY NO.	PART NO.	DESCRIPTION
1	127426X	Seat
2	140551	Bracket, Pivot, Seat
3	71110616	Bolt
4	19131610	Washer 13/32 x 1 x 10 Ga.
5	145006	Clip, Push-in
6	73800600	Nut
7	124181X	Spring, Seat
8	17000616	Screw, Thdrol 3/8-16 x 1-1/2
9	19131614	Washer 13/32 x 1 x 14 Ga.
10	**174894**	Pan, Asm Seat
12	121246X	Bracket, Mounting, Switch, Seat
13	121248X	Bushing, Nylon
14	72050412	Nut, Crownlock 1/4-20 x 1-1/2
15	134300	Spacer, Split
16	121250X	Spring
17	123976X	Nut, Lock, Flange 1/4 Gr. 5
21	171852	Bolt, Shoulder 5/16-18 UNC
22	73800500	Nut
23	71110814	Bolt Hex Blk
24	19171912	Washer 17/32 x 1-3/16 x 12 Ga.
25	127018X	Bolt Shoulder 5/16-18 x .62
26	10040800	Washer Lock Hvy Hclc Spr 1/2

NOTE: All component dimensions given in U.S. inches
1 inch = 25.4 mm

REPAIR PARTS

TRACTOR - - MODEL NUMBER RE12538E

DECALS

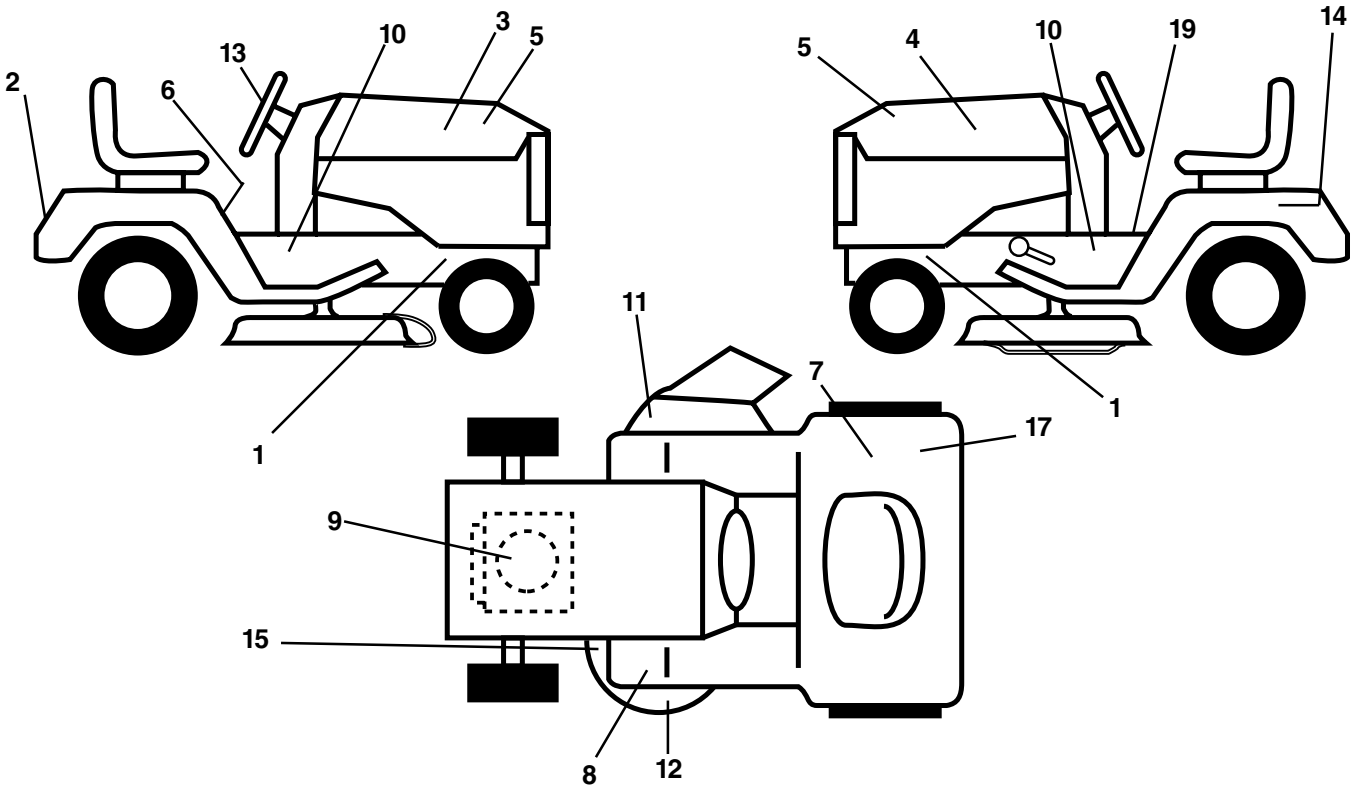

KEY NO.	PART NO.	DESCRIPTION
1	159736	Decal, Chassis Hot Muffler
2	170752	Decal, Fender Logo
3	153266	Decal, Hood Rh
4	153267	Decal, Hood Lh
5	152786	Decal, HP Hood
6	145498	Decal, Read Owner's Manual Syms
7	145437	Decal, Europe Stand CE
8	159737	Decal, Brake/Clutch Symbol LT
9	170841	Decal, HP Engine
10	127900	Decal Chassis 38"
11	145494	Decal, Mower Cutfinger Symbol
12	**134999**	Decal, Enviro Deck White
13	127075	Decal Wheel Steering
14	145005	Decal, Battery Dan/Poi P/L Symbols
15	136832	Decal, V-Belt
17	126187X	Decal, 100 DBA
19	140837	Decal, Parking Brake
- -	138311	Decal, Handle, Lift, Height Adjust (Lift Handle)
- -	162598	Decal, Drawbar Load Limit
- -	**176886**	Manual, Operator's (European)
- -	**176887**	Manual, Operator's (Scand)
- -	**176888**	Manual, Repair Parts

TIRES AND WHEELS

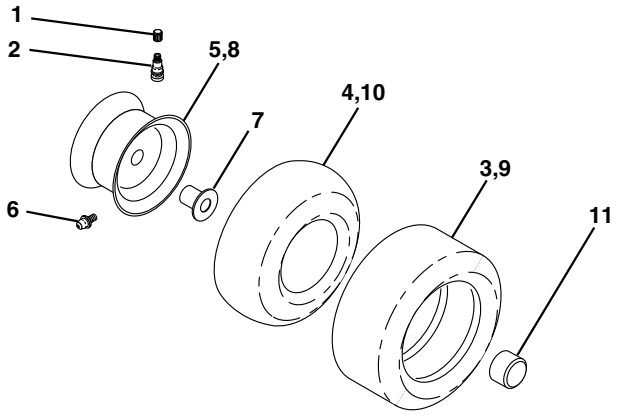

KEY NO.	PART NO.	DESCRIPTION
1	59192	Cap, Valve
2	65139	Stem, Valve
3	106222X	Tire Front
4	59904	Tube, Front (not furnished)
5	106732X427	Rim, Asm. Front
6	278H	Grease Fitting (rear tire only)
7	9040H	Bearing, Flange (front tire only)
8	106108X427	Rim, Asm. Rear
9	124635X	Tire, Rear
10	7152J	Tube, Rear (not furnished)
11	**104757X428**	Cap, Axle
- -	144334	Sealant, Tire (10 oz. Tube)

NOTE: All component dimensions given in U.S. inches
1 inch = 25.4 mm

REPAIR PARTS

TRACTOR - - MODEL NUMBER RE12538E

MOWER LIFT

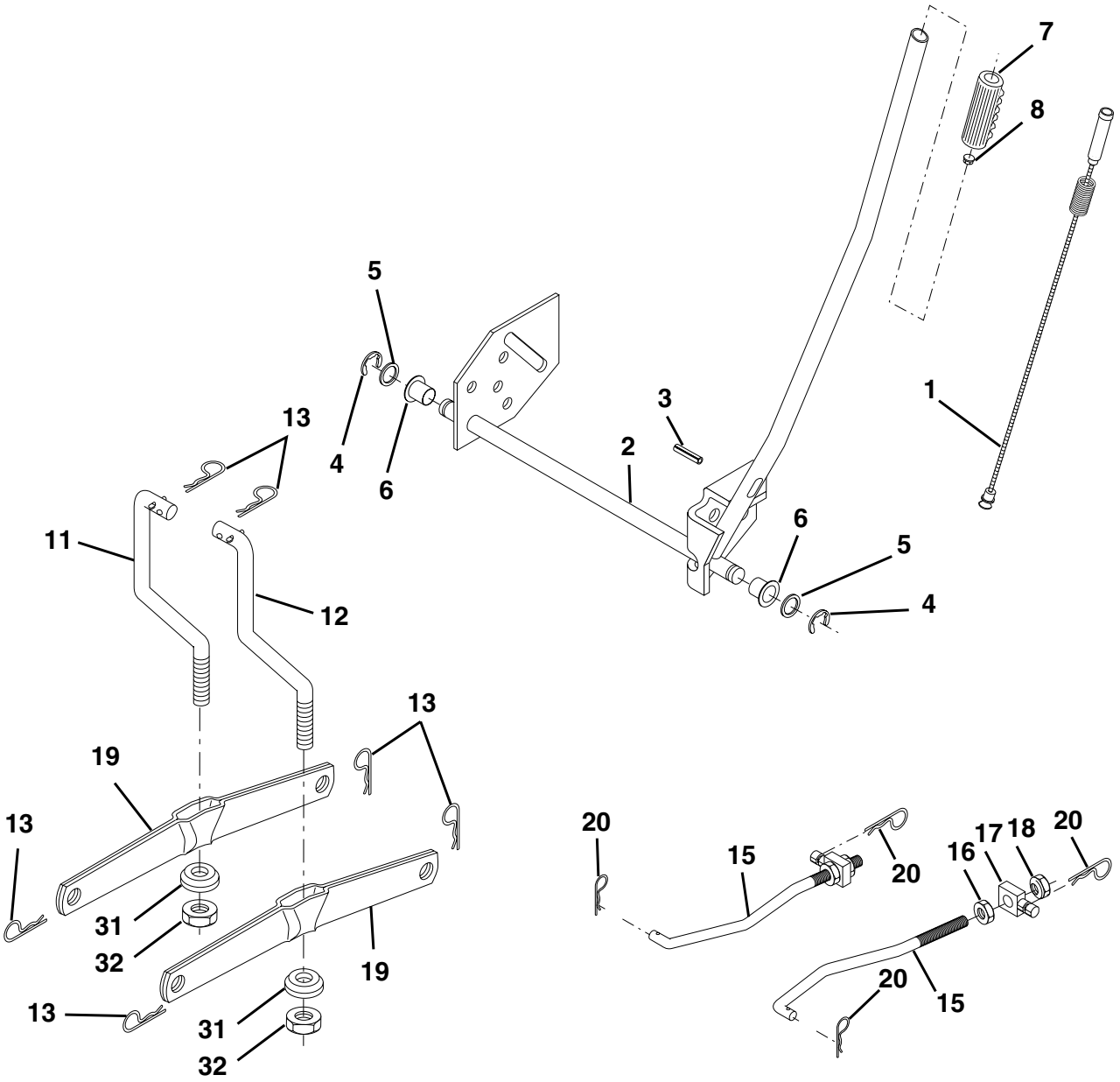

KEY NO.	PART NO.	DESCRIPTION
1	159460	Asm. Inner Wire w/Plunger
2	159471	Asm., Shaft, Lift
3	105767X	Pin, Groove
4	12000002	Ring, E #5133-62
5	19211621	Washer 21/32 x 1 x 21 Ga.
6	120183X	Bearing, Nylon
7	109413X	Grip Handle Bicycle Matte Blk
8	124526X	Button, Plunger
11	139865	Link, Lift, Lh
12	139866	Link, Lift, Rh
13	4939M	Spring, Retainer

KEY NO.	PART NO.	DESCRIPTION
15	173288	Link, Front
16	73350800	Nut, Jam, Hex 1/2-13 Unc
17	130171	Trunnion
18	73800800	Nut Lock w/wsh 1/2-13 Unc
19	139868	Arm, Suspension, Rear
20	163552	Spring, Retainer
31	169865	Bearing, Pvt Lft
32	73540600	Nut Crownlock 3/8-24

NOTE: All component dimensions given in U.S. inches
1 inch = 25.4 mm

REPAIR PARTS

TRACTOR - - MODEL NUMBER RE12538E

MOWER DECK

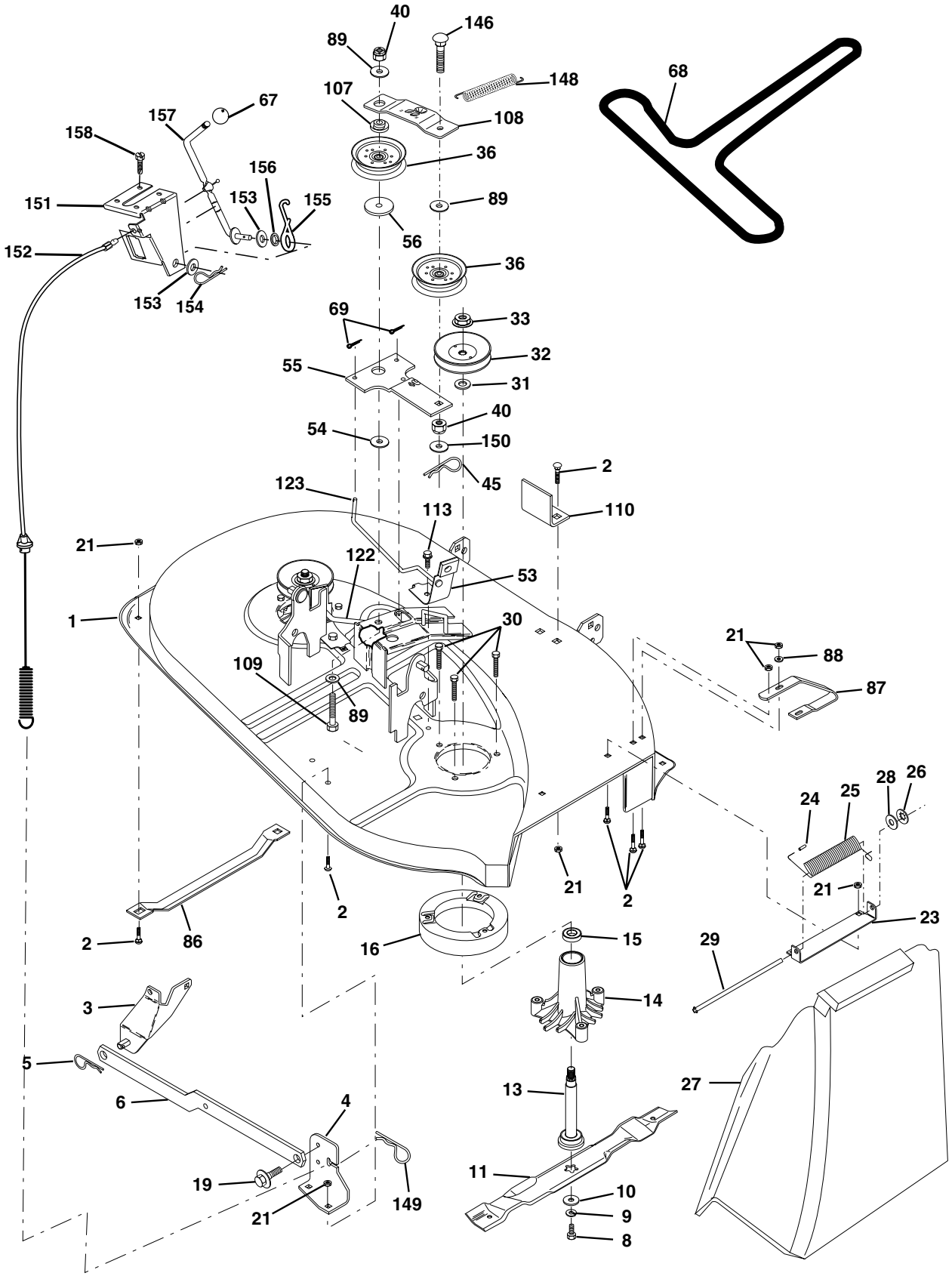

REPAIR PARTS

TRACTOR - - MODEL NUMBER RE12538E

MOWER DECK

KEY NO.	PART NO.	DESCRIPTION
1	170280	Deck Asm Weldment
2	72140506	Bolt
3	138017	Asm., Bar, Anti-Sway
4	169970	Bracket Sway Bar Deck 38/42"
5	4939M	Spring, Retainer
6	130832	Arm, Suspension, Rear
8	850857	Bolt 3/8-24 x 1.25 Gr. 8
9	10030600	Washer, Lock
10	140296	Washer, Hardened
11	138497	Blade, Mower, Hi Lift
13	137645	Asm., Shaft, Mandrel, Vented (Includes key no. 12)
14	128774	Housing, Mandrel, Vented
15	110485X	Bearing, Ball, Mandrel
16	140329	Stripper, Mower
19	132827	Bolt, Shoulder
21	73680500	Nut, Crownlock 5/16 - 18 UNC
23	137607	Bracket, Deflector
24	105304X	Cap, Sleeve
25	123713X	Spring, Torsion, Deflector
26	110452X	Washer, Lock
27	106736X428	Deflector, Shield
28	19111016	Washer 11/32 x 5/8 x 16 Ga.
29	106735X	Rod, Hinge
30	157722	Screw Hex Thdrol
31	129963	Washer, Spacer
32	153532	Pulley, Mandrel
33	137266	Nut Lock 9/16
36	131494	Pulley, Idler, Flat
40	73680600	Nut, Crownlock 3/8 - 16 UNC
45	4497H	Retainer Spring 1: Zinc/Cad
53	130840	Brake Assembly
54	133943	Washer, Hardened
55	133840	Arm, Idler Assembly
56	165723	Spacer, Retainer
67	106932X	Knob Rd 3/8-16 Plstc Thds Blk
68	144200	V-Belt, Mower
69	76020312	Pin, Cotter 3/32 x 3/4
86	7631J	Runner, LH
87	128772	Runner, RH
88	19111216	Washer 11/32 x 3/4 x 16 Ga.
89	19131612	Washer 13/32 x 1 x 12 Ga.
107	133502	Spacer, Retainer
108	133503	Stiffener, Idler Arm
109	74760640	Bolt, hex Head 3/8-16 x 2-1/2
110	142587	Upstop Deck Front 38"
113	17060512	Screw, 5/16-18 x 3/4
122	131289	Rod, Brake, LH
123	169971	Rod, Brake, RH
146	165891	Bolt Carriage Idler
148	169022	Spring Return Idler
149	165898	Retainer Spring Yelow Zinc
150	19091216	Washer 9/32 x 3/4 x 16 Ga.
151	169670	Bracket Clutch Cable
152	172758	Clutch Cable 38"/42"
153	169674	Washer Flat 3/8" Type B
154	169675	Spring Retainer
155	169671	Spring Retention Lvr Cltch Cab
156	169672	Spacer Clutch Cable 3/8"
157	169669	Rod Clutch Cable 3/8"
158	17720410	Screw Hex Thd Cut 1/4-20 x 5/8
- -	130794	Asm. Mandrel (includes key nos. 8-10, 12-15, 31 and 33)
- -	170317	Mower Deck, Complete

NOTE: All component dimensions given in U.S. inches
1 inch = 25.4 mm

SERVICE POLICY WARRANTY

TECUMSEH

Issued January 1980
Revised January 1991

LIMITED WARRANTIES FOR NEW PEERLESS GEAR POWER TRAIN COMPONENTS

A. Products Warranted

Peerless Gear and Machine Division of Tecumseh Products Company ("Tecumseh"), subject to the limitations contained below, will, at its option, repair or replace, without charge for parts or labor only, any part of a new Power Train Component (which as used herein means and includes the transaxle, gear box, transmission, differential and right angle drives, and any part of the Power Train Component), EXCEPT any new Power Train Component incorporated in equipment used for commercial or rental purposes, which is found upon examination by any Tecumseh Authorized Service Outlet or by Tecumseh's factory in Grafton, Wisconsin, to be DEFECTIVE IN MATERIAL AND/OR WORKMANSHIP if received by Tecumseh or a Tecumseh Authorized Service Outlet for such examination within TWO YEARS from the date of sale to the original consumer purchaser of Peerless Series 820, 900, 910, 915, 920, 930 transaxles and Series 1100 angle drive and ONE YEAR for all other Peerless products. New Power Train Components incorporated in equipment used for commercial purposes are warranted in the same manner and to the same extent EXCEPT such Power Train Components are warranted for NINETY (90) DAYS ONLY, and must be received by Tecumseh or by a Tecumseh Authorized Service Outlet for such examination within 90 days from the date of sale to the original purchaser. New Power Train Components Incorporated in equipment used for rental purposes are warranted in the same manner and to the same extent EXCEPT such Power Train Components are warranted for THIRTY (30) DAYS ONLY, and must be received by Tecumseh or a Tecumseh Authorized Service Outlet within 30 days from the date of sale to the original purchaser.

B. Products And Items Not Warranted

1. Alterations or Modifications of Power Train Components.
2. Accidents, Normal Maintenance, Failure to follow the Original Equipment Manufacturer's Manual.

This warranty covers only parts of new Power Train Components which are found upon examination to be defective in material or workmanship as delivered to the original purchaser. This warranty does not cover defects caused by depreciation or damage caused by normal wear, accidents, improper maintenance, improper use or abuse of the product, failure to follow the instructions contained in an Instruction Manual for the operation of the Power Train Component and parts. The cost of normal maintenance and replacement of service items which are not defective shall be paid for by the original purchaser.

C. Securing Warranty Service

Warranty service can be arranged for by contacting either a Tecumseh Authorized Service Outlet (any Tecumseh Registered Service Dealer, Tecumseh Authorized Service Distributor, or Tecumseh Central Warehouse Distributor) or by contacting Tecumseh, c/o Service Manager, Engine and Transmission Group Service Division, 900 North Street, Grafton, Wisconsin 53024. Warranty service can only be performed by a Tecumseh Authorized Service Outlet or by Tecumseh at its factory in Grafton, Wisconsin. At the time of requesting warranty service, evidence must be presented of the date of sale to the original purchaser. The purchaser shall pay any charges for making service calls and/or for transporting the product to and from the place where the inspection and/or warranty work is performed. The purchaser shall be responsible for any damage or loss incurred in connection with the transportation of Power Train Components and/or part(s) of the Power Train Components submitted for inspection and/or warranty work.

D. Limitation of Damages and Implied Warranties

The foregoing EXPRESSED WARRANTY IS IN LIEU OF ALL OTHER EXPRESS WARRANTIES. Neither Tecumseh nor any of its affiliates makes any warranties, representations or promises, written or oral, as to the quality of the Power Train Component or any of its parts, other than as set forth herein.

ANY IMPLIED WARRANTY OF MERCHANTABILITY OR FITNESS FOR A PARTICULAR PURPOSE, TO THE EXTENT THAT EITHER MAY APPLY TO ANY PART(S) OF POWER TRAIN COMPONENTS, SHALL BE LIMITED IN DURATION TO THE PERIODS OF THE EXPRESSED WARRANTIES DEFINED IN PARAGRAPH A HEREOF. IN NO EVENT WILL TECUMSEH BE LIABLE FOR ANY INCIDENTAL, CONSEQUENTIAL OR SPECIAL DAMAGES AND/OR EXPENSES. Some states do not allow limitations on how long an implied warranty lasts or the exclusion or limitation of incidental or consequential damages, so the above limitation(s) or exclusion(s) may not apply to you. This warranty gives you specific legal rights and you may also have other legal rights which vary from state to state.

E. No Dealer Warranty

Tecumseh neither assumes nor authorizes any other person, natural or corporate, to assume for Tecumseh any other obligations or liabilities in connection with or with respect to any part(s) of a Power Train Component. The seller or dealer of part(s) of a Power Train Component has no authority, whatsoever, to make any representations or promises on behalf of Tecumseh or to modify the terms or limitations of Tecumseh's warranty in any way.